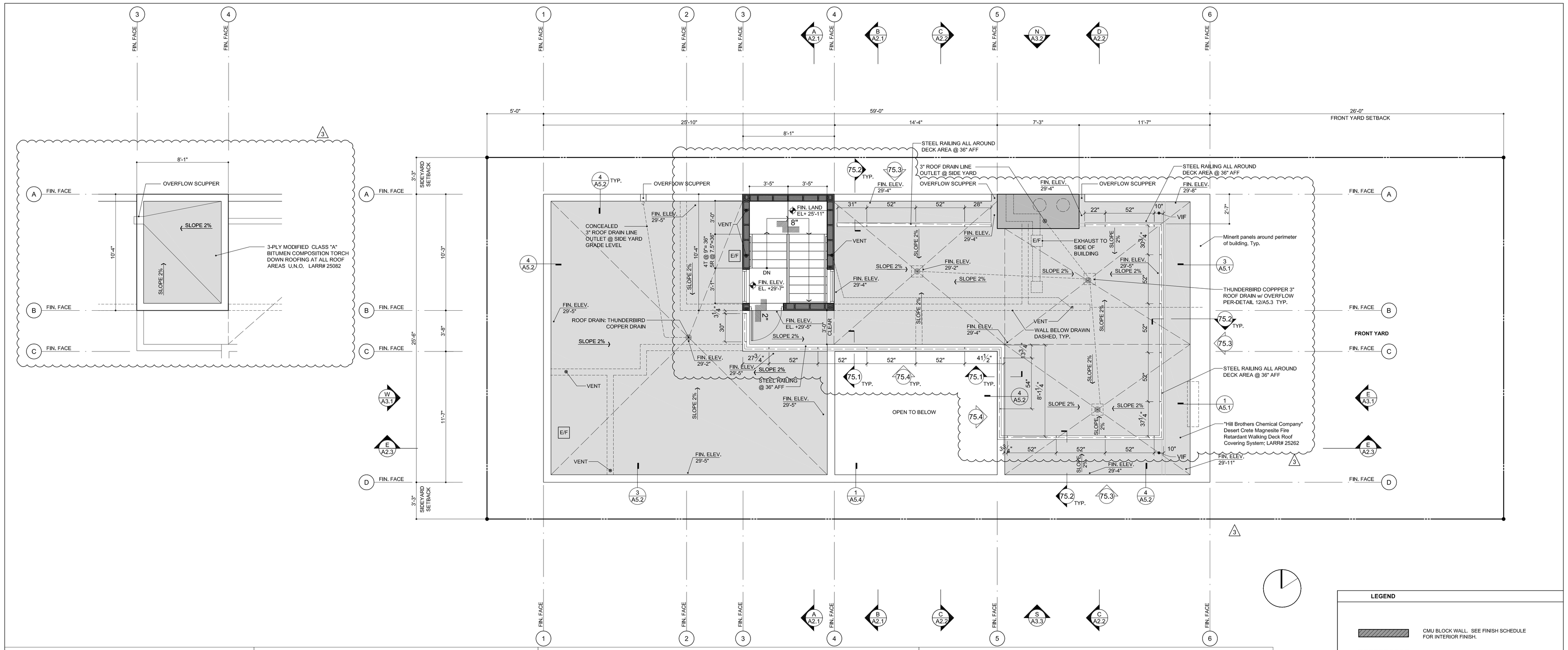


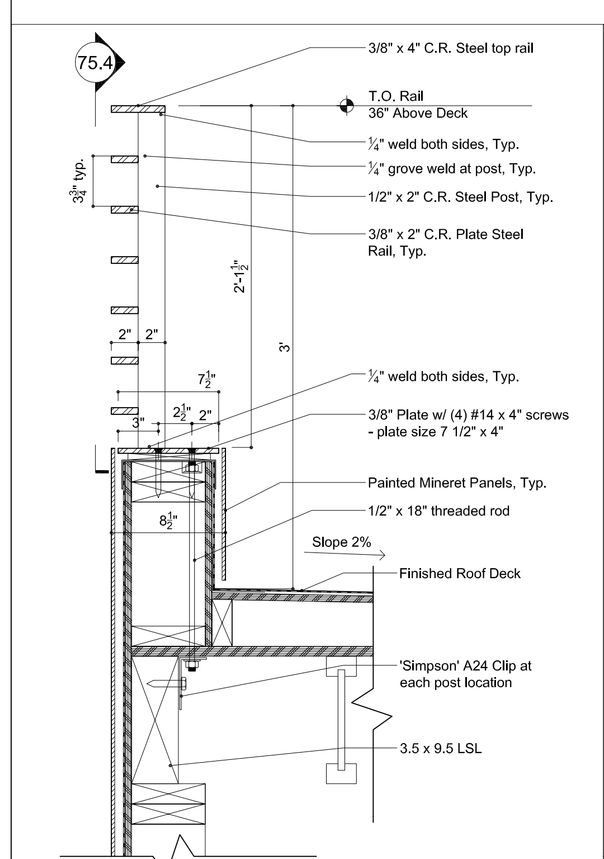


75.1 Typ. Rail Connection @ Top of Parapet
1 1/2" = 1'-0" 2/27/08 Arnall Residence

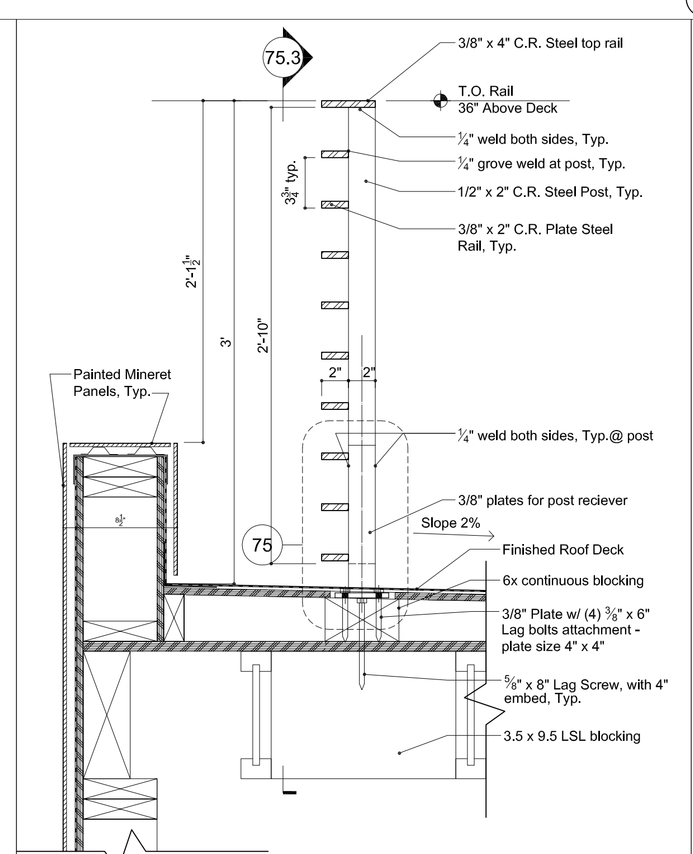


75.2 Typ. Rail Connection @ Roof Deck
1 1/2" = 1'-0"

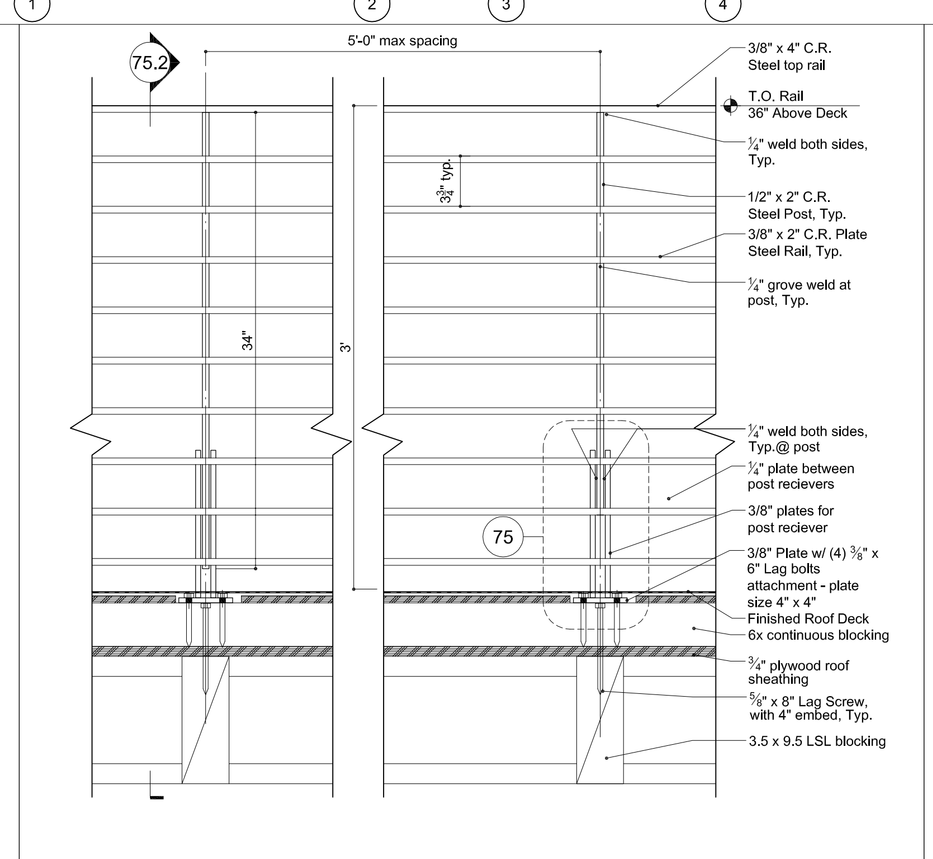


75.3 Typ. Rail Elevation @ Roof Deck
1 1/2" = 1'-0"

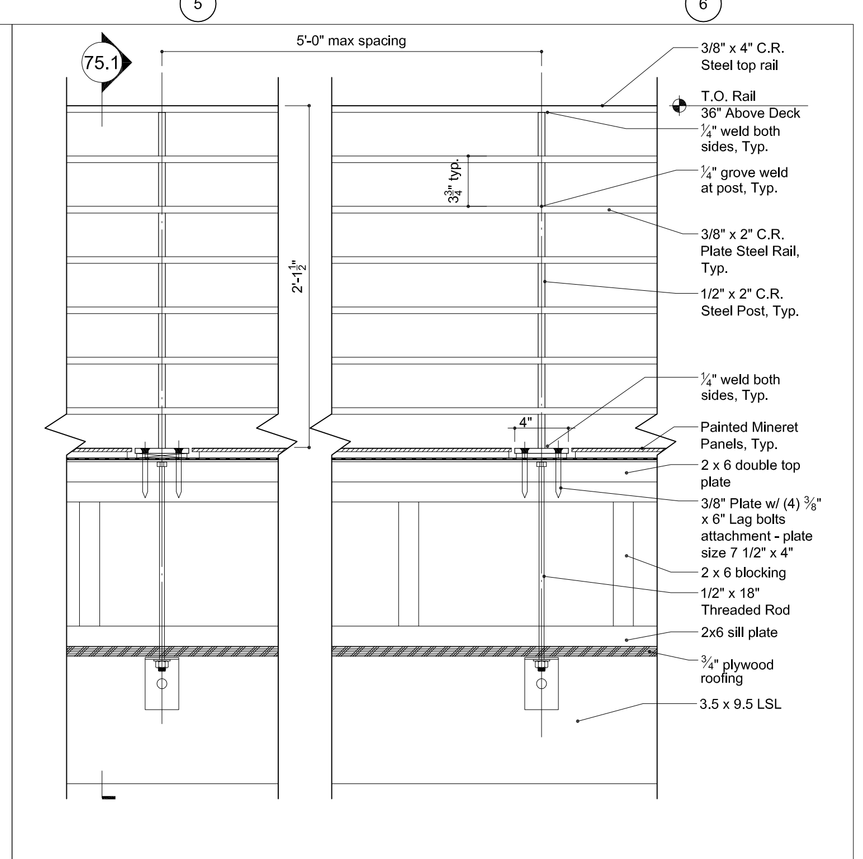


75.4 Typ. Rail Connection Elevation @ T.O.Parapet
1 1/2" = 1'-0" 2/27/08 Arnall Residence

**LEGEND**

| | |
|---|---|
| | CMU BLOCK WALL. SEE FINISH SCHEDULE FOR INTERIOR FINISH. |
| | WALLS BELOW ROOF LEVEL |
| 100 Room Name | ROOM NAME: SEE FINISH SCHEDULE. |
| D01 | DOOR NUMBER: SEE DOOR SCHEDULE. |
| W10 | WINDOW NUMBER: SEE WINDOW SCHEDULE. ONLY SHOWN ON ELEVATIONS |
| 1 / 4 A5.0 2 / 3 | INTERIOR ELEVATION REFERENCE. SEE DETAIL NUMBER AND SHEET INDICATED. |
| E/F | EXHAUST FAN JACK |


Glen Irani Architects Inc.
410 Sherman Canal, Venice, CA. 90291 tel: 310.305.8840 fax: 310.822.1801
girani@glenirani.com


| ISSUE / REVISION | DATE |
|---|---|
| PLANCHECK SUBMITTAL | 09.19.06 |
| PLANCHECK RE-SUBMITTAL | 12.15.06 |
| PLANCHECK PERMIT | 01.30.07 |
| Roof Access Addition 3 | 11.20.07 |

project:
Arnall Residence
2630 Strongs Dr.
Venice, CA. 90291

sheet no .
A1.3

| | |
|---|---|
| DRAWN BY | YD |
| JOB NUMBER | 05ARN010 |
| SCALE | 1/4" = 1'-0" |

sheet title:
Roof Plan

7/30/2008 3:44:11 PM, 1:1